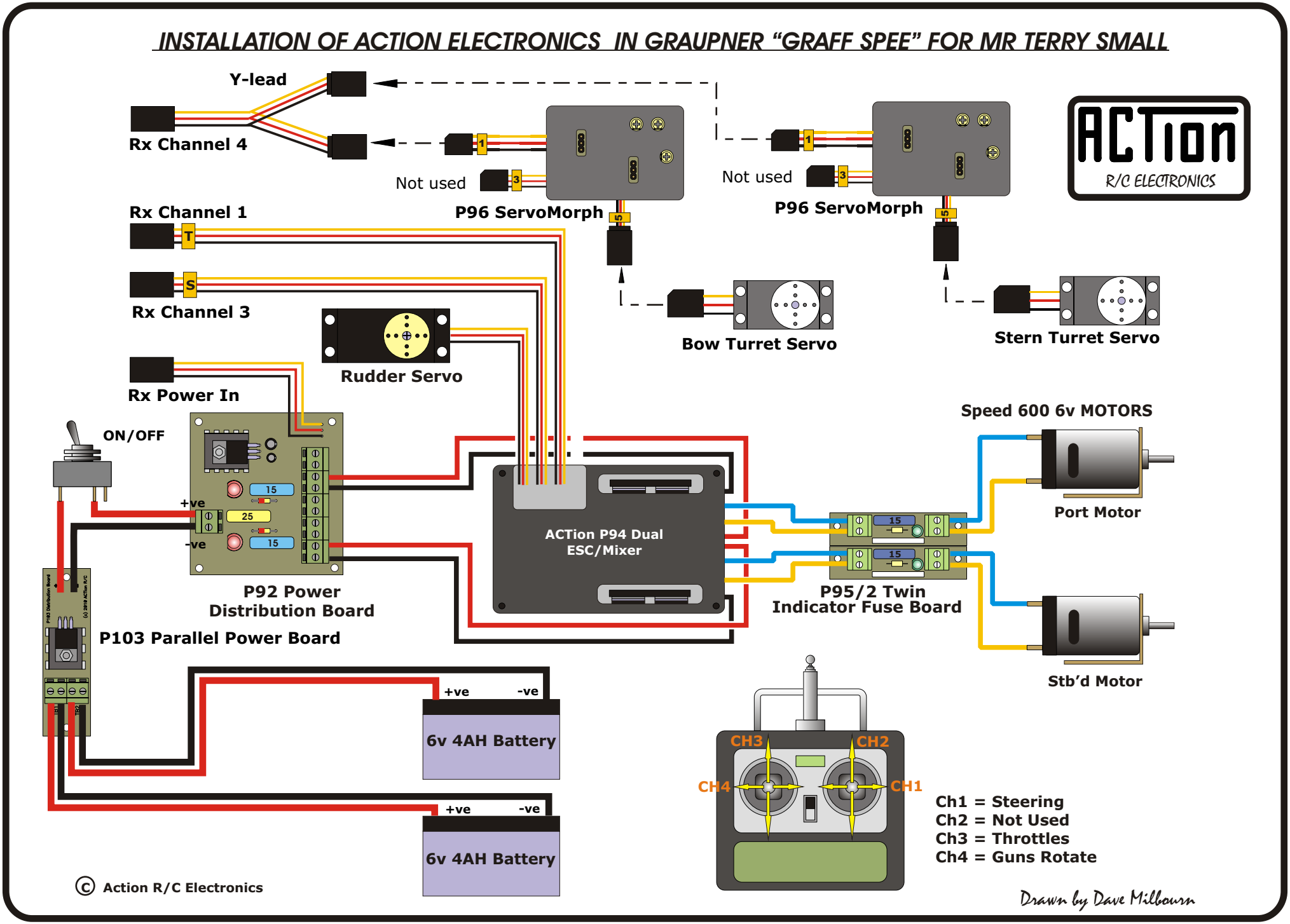INSTALLATION OF ACTION ELECTRONICS IN GRAUPNER "GRAFF SPEE" FOR MR TERRY SMALL