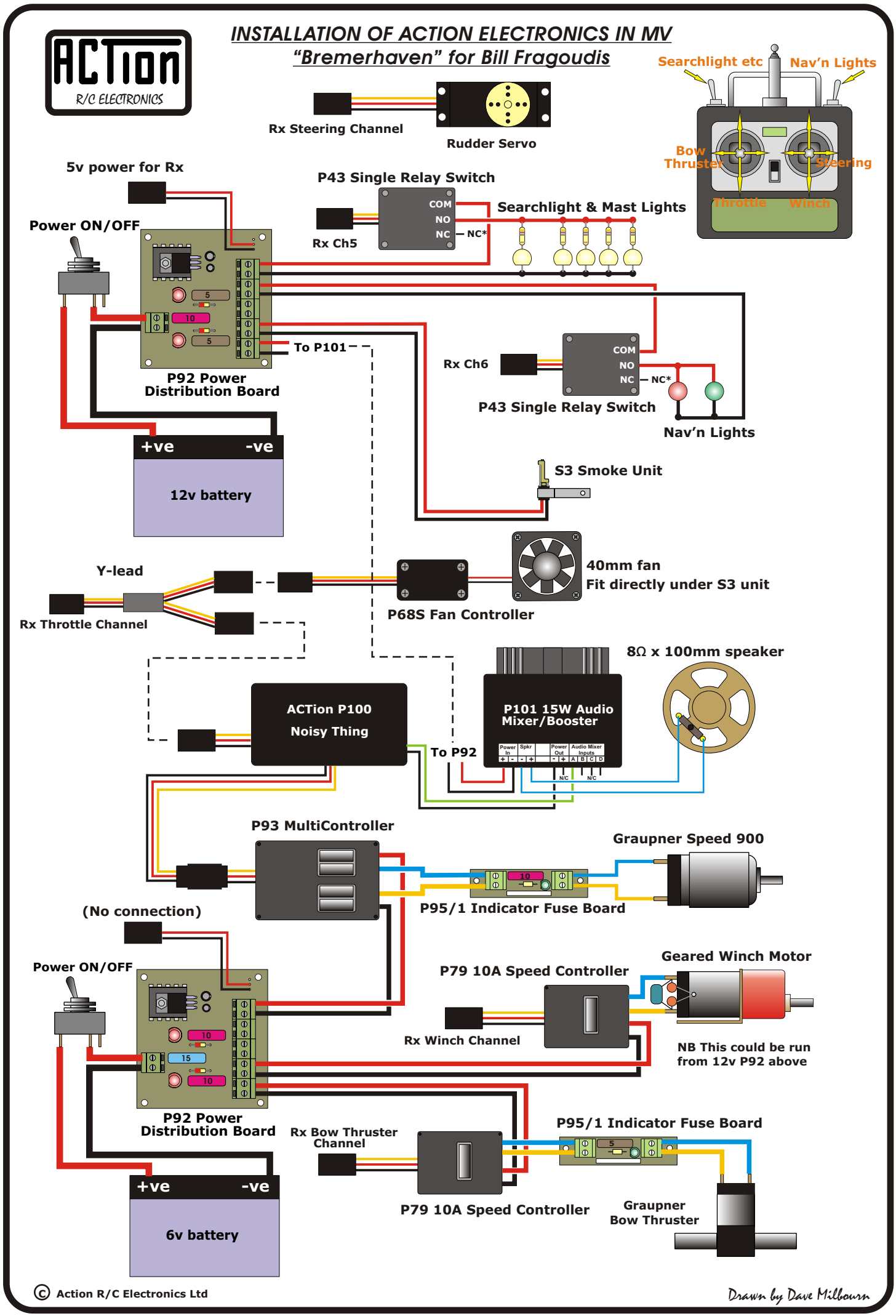INSTALLATION OF ACTION ELECTRONICS IN MV "Bremerhaven" for Bill Fragoudis