THREE VARIATIONS ON TWIN-MOTOR INSTALLATION

(....and not a mixer in sight....!)

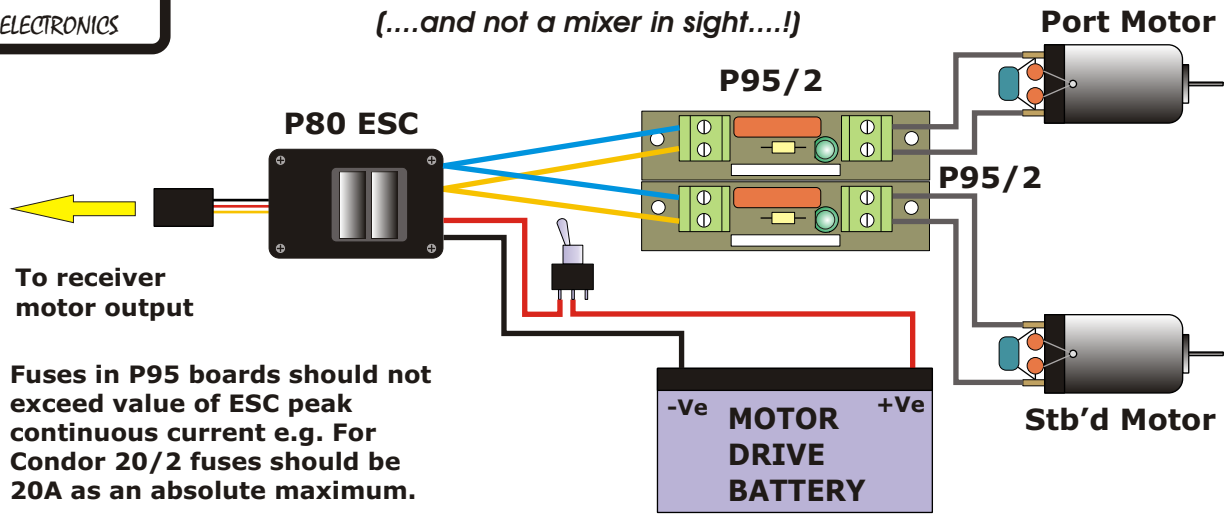

Fuses in P95 boards should not exceed value of ESC peak continuous current e.g. For Condor 20/2 fuses should be 20A as an absolute maximum.

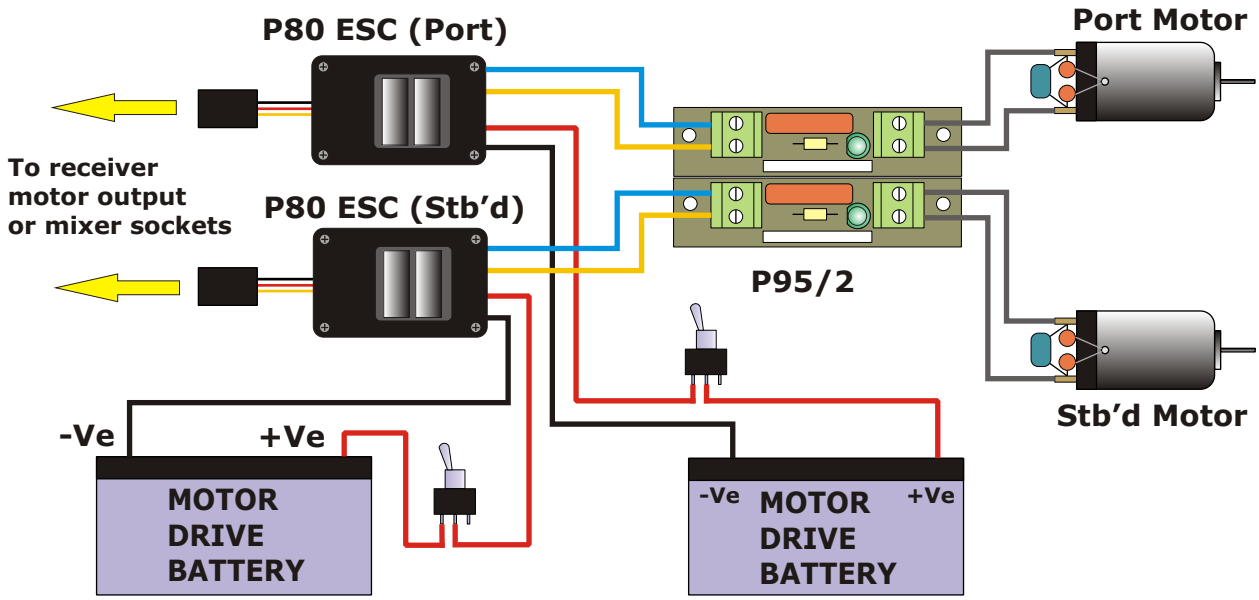

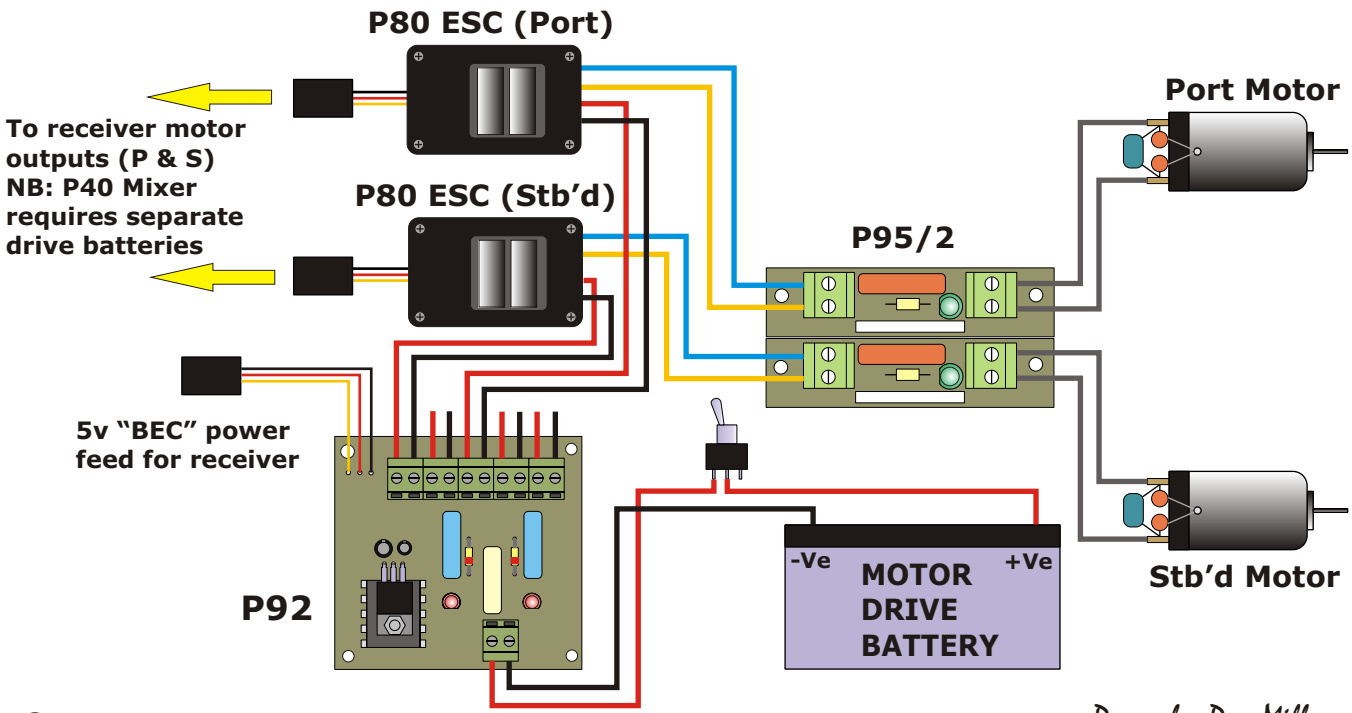

© Action R/C Electronics

Drawn by Dave Milbourn