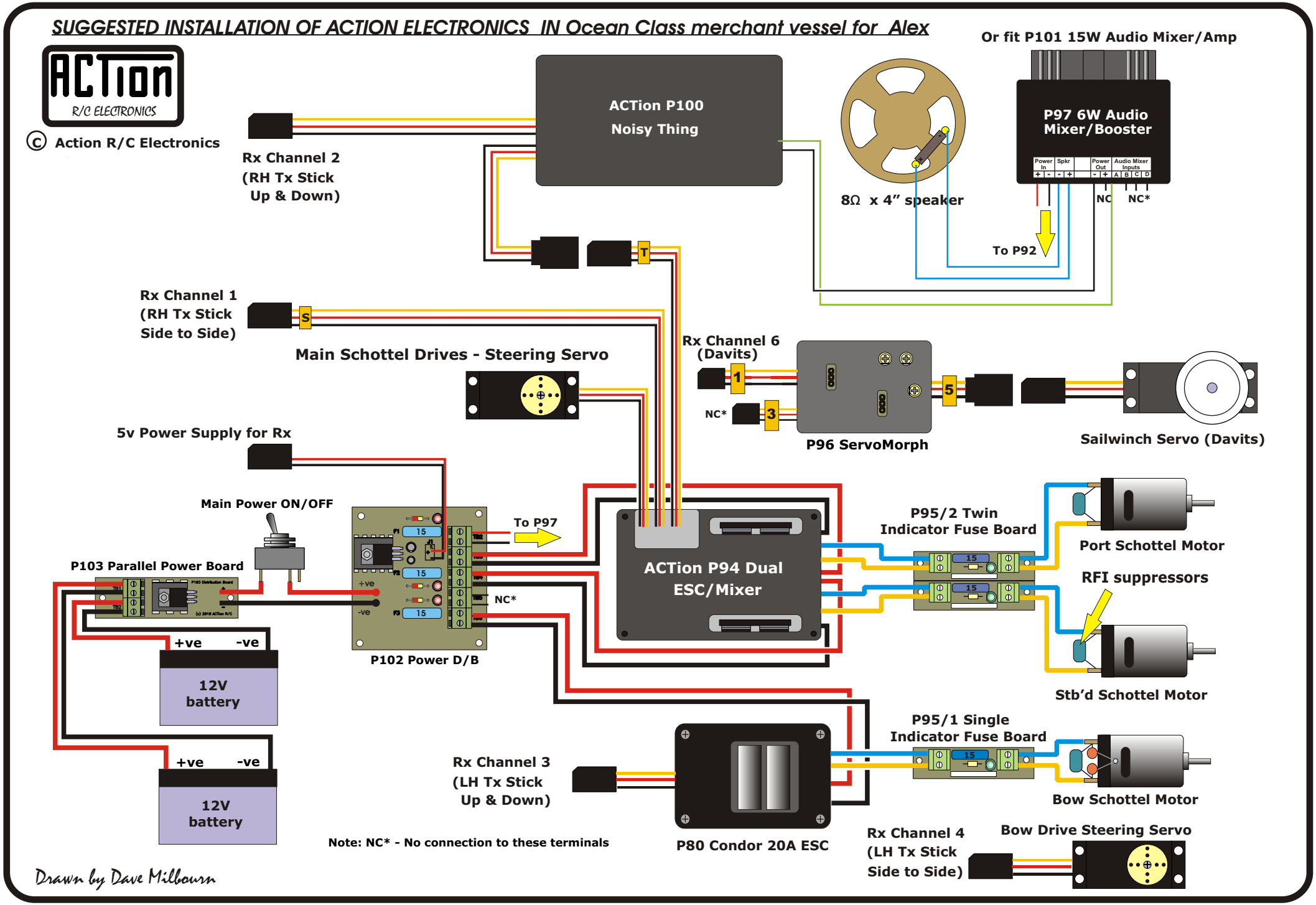SUGGESTED INSTALLATION OF ACTION ELECTRONICS IN Ocean Class merchant vessel for Alex