INSTALLATION OF ACTION UNITS IN "JULES VERNE" FOR MR ONNO SIEGERS

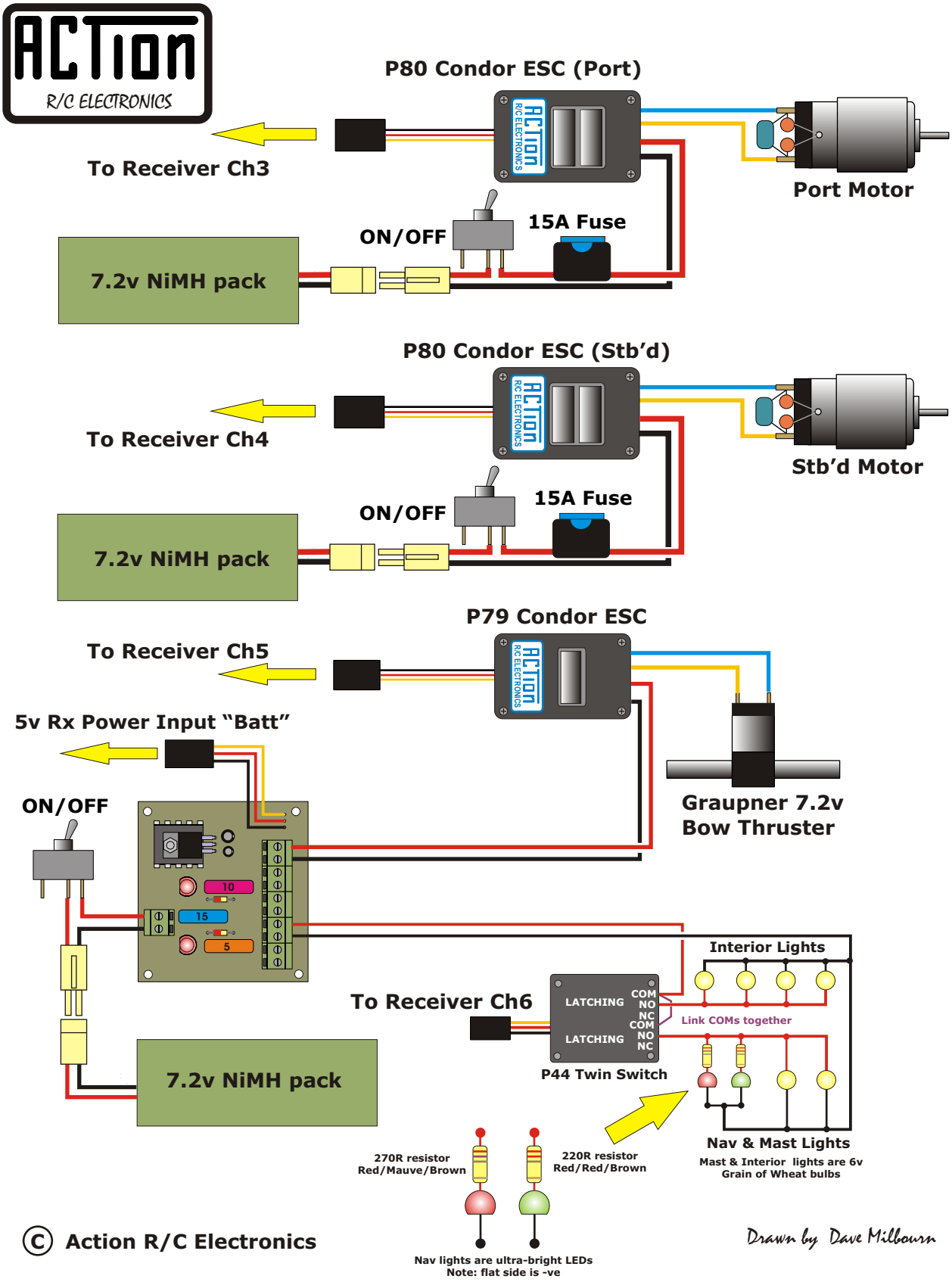

© Action R/C Electronics

Drawn by Dave Milbourn